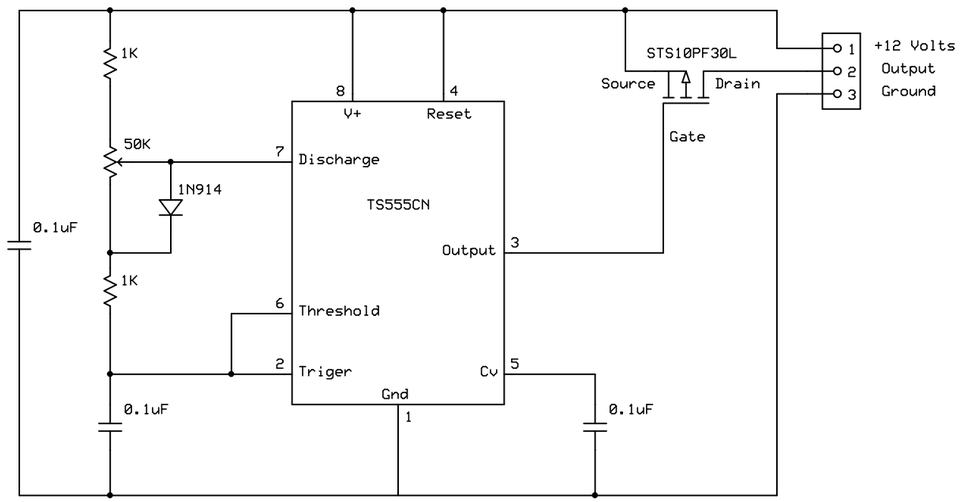

Parmer Tears		
DC Dimmer		
Paul Parmer	Rev 1.0 6/20/2006	Page 1 of 1